minimum 3 1/2 wraps of tension cable on the drum!

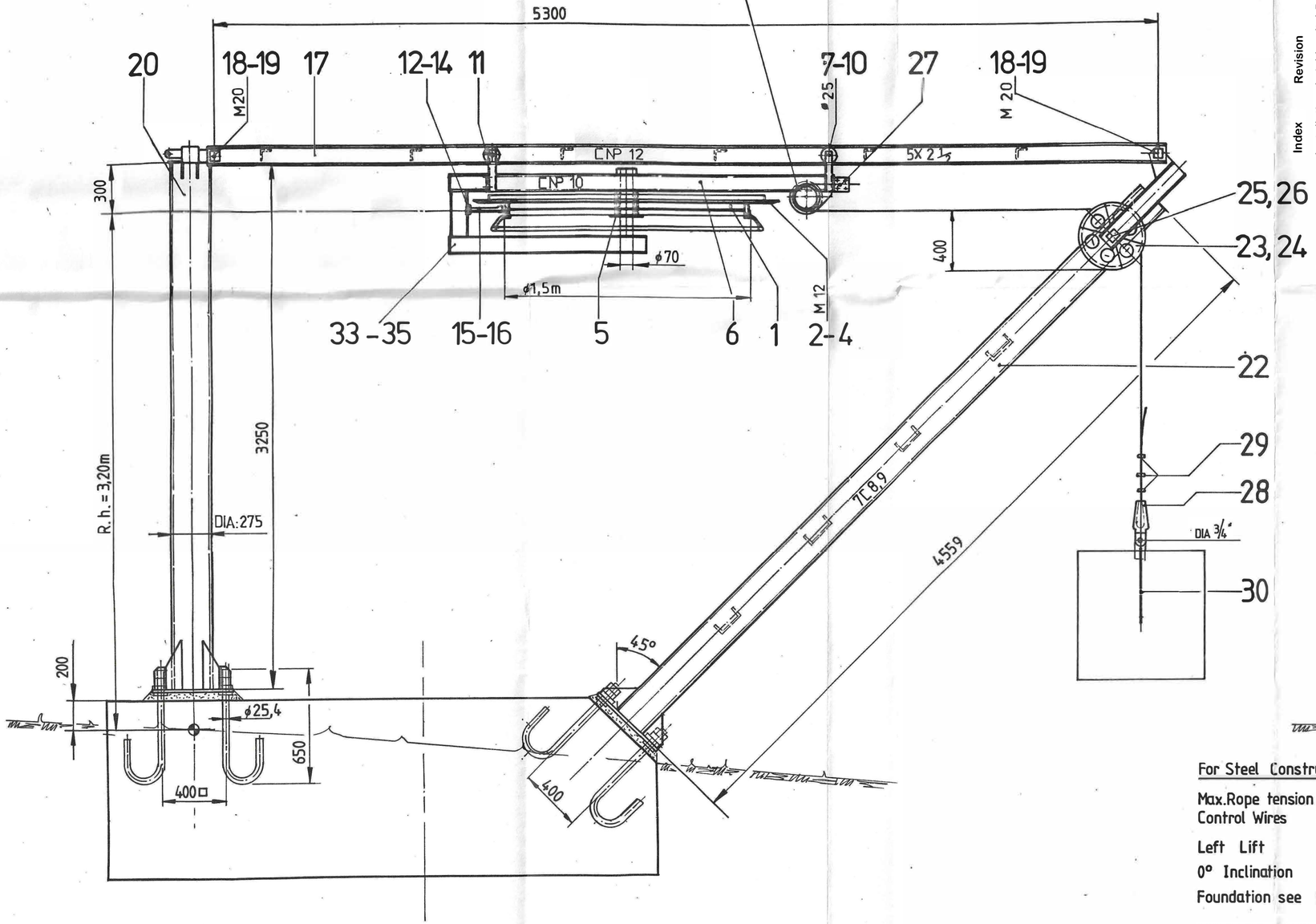

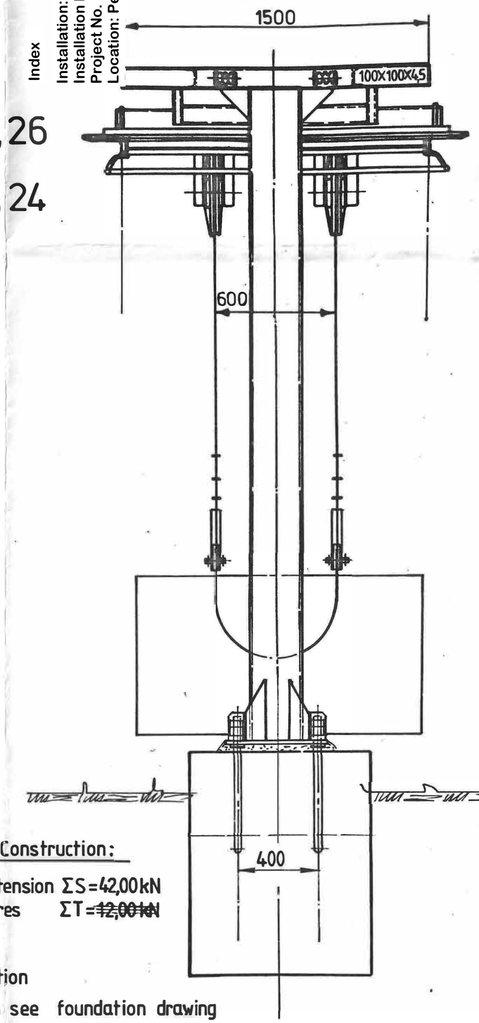

Index Revision

Installation: Leichhardt J-Bar
Installation No. 18.813
Project No. 2022-11
Location: Perisher, NSW

For Steel Construction:

Max.Rope tension ΣS=42,00kN
Control Wires ΣT=~~12,00kN~~

Left Lift

0° Inclination

Foundation see foundation drawing

Department of Planning and Environment

Issued under the Environmental Planning and Assessment Act 1979

Approved Application No DA 22/11891

Granted on the 18 August 2023

Signed M Brown

Sheet No 12 of 16

Ae. Index	Änderung	Datum	Name
c			
b			
a			

Anlage: Cow Pasture

Auftrags Nr. 18.813 Ausführg. X

Alpkrohn Eng. Gutheoa, Australia

Maßstab 1:20

04 30

transp. 81.02-24

Return Terminal

Type OE

Doppelmayr

Zeichnung Nr. S-35 660

10

Format A1